DOMUS

WINNING THE FUTURE THROUGH INNOVATION

# ECOTANK XL

# ECOTANK XL - Water recovery

Centralised 1,000-litre tanks, from 1 to 3 units, for one or several machines from 35 to 120 kg.

High-capacity models, ideal for industrial laundries with large washing machines.




## OUTSTANDING FEATURES

High-capacity tanks designed to store up to 1000 litres, allowing for significant water savings.

Compatible:
Different ECOTANK XL units can be combined with various Domus machines featuring TOUCH II:
• 1, 2, or 3 ECOTANK XL tanks.
• 1 or more machines with the ECOTANK XL units.

Durable: Manufactured from high-density polyethylene with an external reinforcement of galvanised steel structure.

## EFFICIENCY

Up to **40 and 70% savings***.

Detergent savings: By optimising the use of water in different phases of the wash, ECOTANK XL reduce the need for chemicals to treat the water.

*Depending on the types of programs, garments and processes.

## EASY MAINTENANCE

Fixing: Incorporate holes for easy anchoring to the floor.
Accessory kit available: To easily connect the washers and barriers with the tanks (option).
2 water level sensors: on each ECOTANK, indicating the minimum and maximum level.

## OTHERS

One or more washing machines can be connected so that the wash water can be reused.
Sold separately.
No external panels, only the frame.
Required: Water and electricity connections (connections not included with the tank).
Make connections between machines and tanks: hose kit and fittings available as an option to connect 1 washer/barrier to 3 tanks.

**MACHINES THAT CAN BE CONNECTED WITH ECOTANK XL**
up to 8 * 35/45 kg washers
up to 4 * 60/80 kg washers
up to 3 * 100/120 kg washers

## OPTIONS

• Kit ready for ECOTANK XL conn. 1" for barriers ASA-100
• Kit ready for ECOTANK XL conn. 1" for barriers DHB-27
• Kit ready for ECOTANK XL conn. 1" for barriers DHB-35
• Kit ready for ECOTANK XL conn. 1" for barriers DHB-50
• Kit ready for ECOTANK XL conn. 1" for barriers DHB-70
• Kit ready for ECOTANK XL conn. 1" for washers DHS-100C/120C
• Kit ready for ECOTANK XL conn. 1" for washers DLS/DHS-35C/45C
• Kit ready for ECOTANK XL conn. 1" for washers DLS/DHS-60C/80C
• Hose kit and accessories for the installation of ECOTANK XL (1 per washer)
• Elevated platform for ECOTANK XL

| WATER RECOVERY TANK | UNIT. | ECOTANK XL |
|---|---|---|
| Tanks capacity | l | 1.000 |
| Front-load washing machine capacity | Kg | 35, 45, 60, 80, 100, 120 |
| Front-load washing machine barrier | Kg | 27, 35, 50, 70, 100 |
| Outdoor furniture | - | skinplate |
| **CONNECTIONS** | | |
| Water inlet | inch | 1" |
| Water outlet | inch | 1" |
| Ø Steam exhaust | mm | 31 |
| Ø Overflow / Drain | mm | 31 |
| Voltage | V | 230V I |
| **DIMENSIONS / PACKING DIMENSIONS** | | |
| Net width / Gross width | mm | 702 / 800 |
| Net depth / Gross depth | mm | 1.375 / 1.450 |
| Net height / Gross height | mm | 2.207 / 2.347 |
| Net weight / Gross weight | Kg | 154 / 179 |
| Volume | m³ | 2,73 |

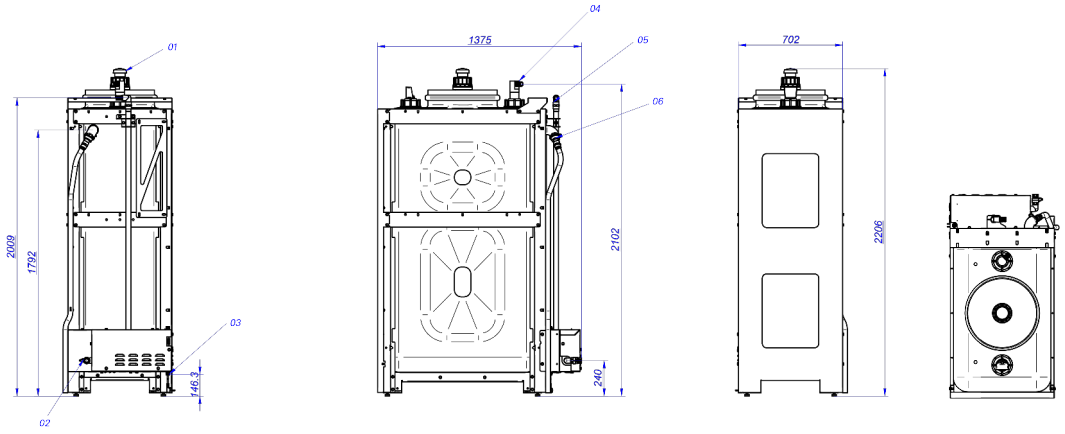


01. Breather
02. Tank manual download
03. Power supply
04. Water inlet from washers
05. Water outlet to washers
06. Overflow